Global LCD Panel Exchange Center www.panelook.com 屏库:全球液晶屏交易中心

NLT Technologies, Ltd.

TFT COLOR LCD MODULE

NL10276BC30-39

38cm (15.0 Type)
XGA
LVDS interface (1port)

DATA SHEET

DOD-PP-1612 (2nd edition)

This DATA SHEET is updated document from DATA SHEET DOD-PP-1397(1).

All information is subject to change without notice. Please confirm the sales representative before starting to design your system.

Document Number: DOD-PP-1612 (2nd edition)
Published date: March 2013 CP(N)

© NLT Technologies, Ltd.
2013 All rights reserved.

One step solution for LCD / PDP / OLED panel application: Datasheet, inventory and accessory! www.panelook.com

Global LCD Panel Exchange Center www.panelook.com 屏库:全球液晶屏交易中心

INTRODUCTION

The Copyright to this document belongs to NLT Technologies, Ltd. (hereinafter called "NLT"). No part of this document will be used, reproduced or copied without prior written consent of NLT.

NLT does and will not assume any liability for infringement of patents, copyrights or other intellectual property rights of any third party arising out of or in connection with application of the products described herein except for that directly attributable to mechanisms and workmanship thereof. No license, express or implied, is granted under any patent, copyright or other intellectual property right of NLT.

Some electronic products would fail or malfunction at a certain rate. In spite of every effort to enhance reliability of products by NLT, the possibility of failures and malfunction might not be avoided entirely. To prevent the risks of damage to death, human bodily injury or other property arising out thereof or in connection therewith, each customer is required to take sufficient measures in its safety designs and plans including, but not limited to, redundant system, fire-containment and anti-failure.

The products are classified into three grades: "**Standard**", "**Special**", and "**Specific**".
Each quality grade is designed for applications described below. Any customer who intends to use a product for application other than that of Standard is required to contact an NLT sales representative in advance.

The **Standard**: Applications as any failure, malfunction or error of the products are free from any damage to death, human bodily injury or other property (Products Safety Issue) and not related the safety of the public (Social Issues), like general electric devices.
Examples: Office equipment, audio and visual equipment, communication equipment, test and measurement equipment, personal electronic equipment, home electronic appliances, car navigation system (with no vehicle control functions), seat entertainment monitor for vehicles and airplanes, fish finder (except marine radar integrated type), PDA, etc.

The **Special**: Applications as any failure, malfunction or error of the products might directly cause any damage to death, human bodily injury or other property (Products Safety Issue) and the safety of the public (Social Issues) and required high level reliability by conventional wisdom.
Examples: Vehicle/train/ship control system, traffic signals system, traffic information control system, air traffic control system, surgery/operation equipment monitor, disaster/crime prevention system, etc.

The **Specific**: Applications as any failure, malfunction or error of the products might severe cause any damage to death, human bodily injury or other property (Products Safety Issue) and the safety of the public (Social Issues) and developed, designed and manufactured in accordance with the standards or quality assurance program designated by the customer who requires extremely high level reliability and quality.
Examples: Aerospace system (except seat entertainment monitor), nuclear control system, life support system, etc.

The quality grade of this product is the "**Standard**" unless otherwise specified in this document.

One step solution for LCD / PDP / OLED panel application: Datasheet, inventory and accessory! www.panelook.com

Global LCD Panel Exchange Center www.panelook.com 屏库:全球液晶屏交易中心

CONTENTS

INTRODUCTION 2
1. OUTLINE 4
1.1 STRUCTURE AND PRINCIPLE 4
1.2 APPLICATION 4
1.3 FEATURES 4
2. GENERAL SPECIFICATIONS 5
3. BLOCK DIAGRAM 6
4. DETAILED SPECIFICATIONS 8
4.1 MECHANICAL SPECIFICATIONS 8
4.2 ABSOLUTE MAXIMUM RATINGS 8
4.3 ELECTRICAL CHARACTERISTICS 9
4.3.1 LCD panel signal processing board 9
4.3.2 Backlight lamp 10
4.3.3 Power supply voltage ripple 11
4.3.4 Fuse 11
4.4 POWER SUPPLY VOLTAGE SEQUENCE 12
4.4.1 LCD panel signal processing board 12
4.4.2 LED driver board 12
4.5 CONNECTIONS AND FUNCTIONS FOR INTERFACE PINS 13
4.5.1 LCD panel signal processing board 13
4.5.2 Backlight lamp 14
4.5.3 Positions of plug and socket 14
4.5.4 Connection between receiver and transmitter for LVDS 15
4.6 DISPLAY COLORS AND INPUT DATA SIGNALS 17
4.7 DISPLAY POSITIONS 18
4.8 SCANNING DIRECTIONS 18
4.9 INPUT SIGNAL TIMINGS 19
4.9.1 Outline of input signal timings 19
4.9.2 Timing characteristics 20
4.9.3 Input signal timing chart 21
4.10 OPTICS 22
4.10.1 Optical characteristics 22
4.10.2 Definition of contrast ratio 23
4.10.3 Definition of luminance uniformity 23
4.10.4 Definition of response times 23
4.10.5 Definition of viewing angles 23
5. ESTIMATED LUMINANCE LIFETIME 24
6. RELIABILITY TESTS 25
7. PRECAUTIONS 26
7.1 MEANING OF CAUTION SIGNS 26
7.2 CAUTIONS 26
7.3 ATTENTIONS 26
7.3.1 Handling of the product 26
7.3.2 Environment 27
7.3.3 Characteristics 27
7.3.4 Others 27
8. OUTLINE DRAWINGS 28
8.1 FRONT VIEW 28
8.2 REAR VIEW 29

One step solution for LCD / PDP / OLED panel application: Datasheet, inventory and accessory! www.panelook.com

Global LCD Panel Exchange Center www.panelook.com 屏库:全球液晶屏交易中心

1. OUTLINE

1.1 STRUCTURE AND PRINCIPLE

Color LCD module NL10276BC30-39 is composed of the amorphous silicon thin film transistor liquid crystal display (a-Si TFT LCD) panel structure with driver LSIs for driving the TFT (Thin Film Transistor) array and a backlight.

The a-Si TFT LCD panel structure is injected liquid crystal material into a narrow gap between the TFT array glass substrate and a color-filter glass substrate.

Color (Red, Green, Blue) data signals from a host system (e.g. signal generator, etc.) are modulated into best form for active matrix system by a signal processing board, and sent to the driver LSIs which drive the individual TFT arrays.

The TFT array as an electro-optical switch regulates the amount of transmitted light from the backlight assembly, when it is controlled by data signals. Color images are created by regulating the amount of transmitted light through the TFT array of red, green and blue dots.

1.2 APPLICATION

- For industrial use

1.3 FEATURES

- Ultra-wide viewing angle (Adoption of Ultra-Advanced Super Fine TFT (UA-SFT))
- Long life LED backlight type
- High contrast
- Wide color gamut
- LVDS interface
- Selectable LVDS input map
- Small foot print
- Replaceable lamp for backlight
- Acquisition product for UL60950-1 /CSA C22.2 No.60950-1-03 (File number: E170632)
- Compliant with the European RoHS directive (2002/95/EC)

One step solution for LCD / PDP / OLED panel application: Datasheet, inventory and accessory! www.panelook.com

Global LCD Panel Exchange Center www.panelook.com 屏库:全球液晶屏交易中心

2. GENERAL SPECIFICATIONS

Display area	304.128 (H) × 228.096 (V) mm		
Diagonal size of display	38cm (15.0 inches)		
Drive system	a-Si TFT active matrix		
Display color	16,777,216 colors (6bit+FRC)		
Pixel	1,024 (H) × 768 (V) pixels		
Pixel arrangement	RGB (Red dot, Green dot, Blue dot) vertical stripe		
Dot pitch	0.099 (H) × 0.297 (V) mm		
Pixel pitch	0.297 (H) × 0.297 (V) mm		
Module size	326.5 (W) ×253.5 (H) × 11.7 (D) mm (typ.)		
Weight	970g (typ.)		
Contrast ratio	900:1 (typ.)		
Viewing angle	*At the contrast ratio ≧10:1* • Horizontal: Right side 88° (typ.), Left side 88° (typ.) • Vertical: Up side 88° (typ.), Down side 88° (typ.)		
Designed viewing direction	Viewing angle with optimum grayscale (γ=2.2): Normal axis (perpendicular)		
Polarizer surface	Antiglare		
Polarizer pencil-hardness	3H (min.) [by JIS K5600]		
Color gamut	*At LCD panel center* 72% (typ.) [against NTSC color space]		
Response time	*Ton+Toff (10%←→90%)* 25ms (typ.)		
Luminance	Luminance 1	330cd/m^2 (typ.), *At IL= 50mA /One circuit*	
	Luminance 2	350cd/m^2 (typ.), *At IL= 55mA /One circuit*	☆
Signal system	LVDS 1port (Receiver: Equivalent of THC63LVDF84B, THine Electronics Inc.) [8-bit digital signals for data of RGB colors, Dot clock (CLK), Data enable (DE)]		
Power supply voltage	LCD panel signal processing board: 3.3V		
Backlight	LED Backlight type: Replaceable part • Lamp holder set: Type No.: 150LHS38 Recommended LED driver board (Option) • LED driver board Luminance 1: Type No.: 150PW02F Luminance 2: user • Corresponding wiring harness Luminance 1: Type No.: 150CBL02 Luminance 2: user		
Power consumption	Luminance 1	*At IL= 50mA /One circuit, Checkered flag pattern,* 9.8W (typ.)	
	Luminance 2	*At IL= 55mA /One circuit, Checkered flag pattern,* 10.7W (typ.)	☆

One step solution for LCD / PDP / OLED panel application: Datasheet, inventory and accessory! www.panelook.com

Global LCD Panel Exchange Center www.panelook.com 屏库:全球液晶屏交易中心

3. BLOCK DIAGRAM

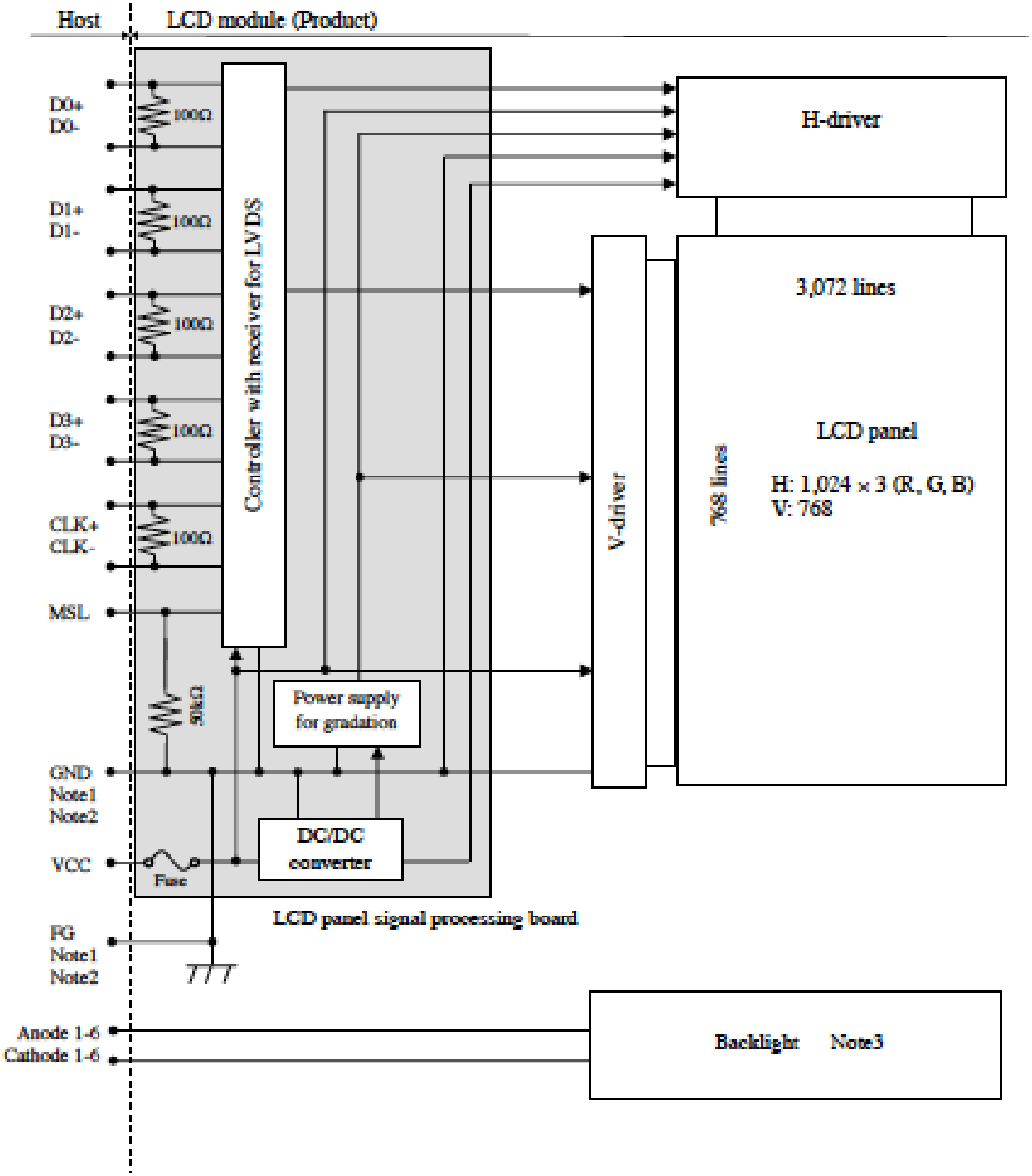

Note1: Relations between GND (Signal ground), FG (Frame ground) in the LCD module is as follows.

GND – FG	Connected

Note2: GND and FG must be connected to customer equipment's ground, and it is recommended that these grounds be connected together in customer equipment.

One step solution for LCD / PDP / OLED panel application: Datasheet, inventory and accessory! www.panelook.com

Global LCD Panel Exchange Center www.panelook.com 屏库:全球液晶屏交易中心

Note3: Detail of backlight

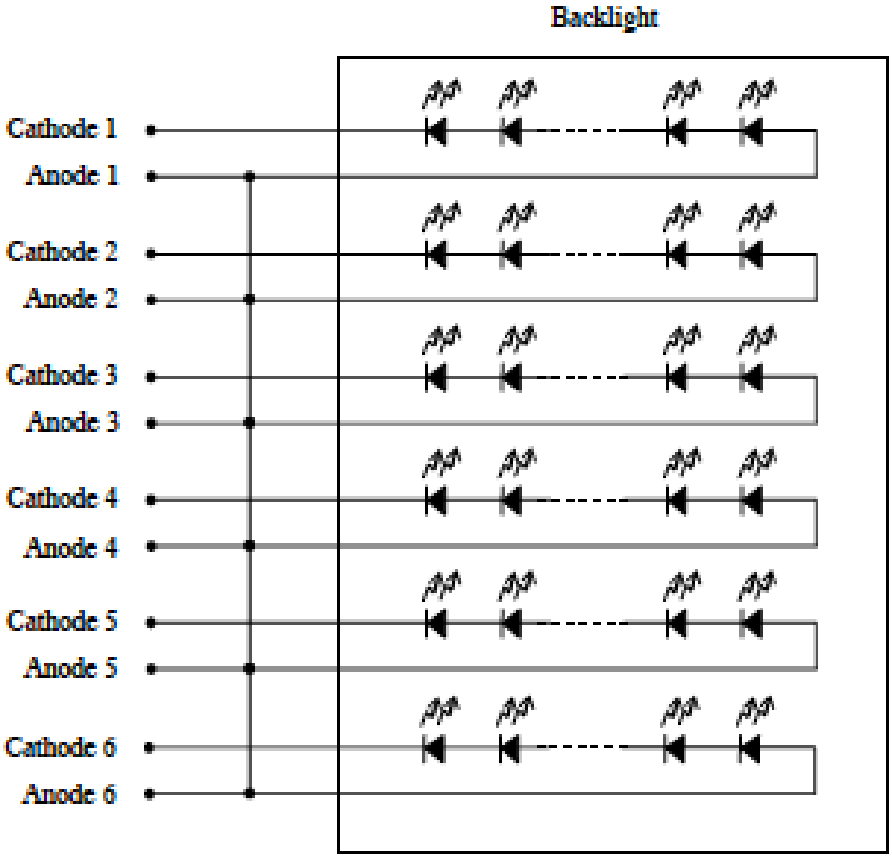

One step solution for LCD / PDP / OLED panel application: Datasheet, inventory and accessory! www.panelook.com

Global LCD Panel Exchange Center www.panelook.com 屏库:全球液晶屏交易中心

4. DETAILED SPECIFICATIONS

4.1 MECHANICAL SPECIFICATIONS

Parameter	Specification		Unit
Module size	326.5 ± 0.5 (W) × 253.5 ± 0.5 (H) × 11.7 ± 0.5 (D)	Note1	mm
Display area	304.128 (H) × 228.096 (V)	Note1	mm
Weight	970 (typ.), 1,050 (max.)		g

Note1: See "8. OUTLINE DRAWINGS".

4.2 ABSOLUTE MAXIMUM RATINGS

Parameter			Symbol	Rating	Unit	Remarks	
Power supply voltage	LCD panel signal processing board		VCC	-0.3 to +4.0	V	-	
Input voltage for signals	Display signals Note1		VD	-0.3 to VCC +0.3	V		
	Function signal Note2		VF				
Backlight	Luminance 1	Forward current	IL	60	mA	per one circuit	
	Luminance 2			65			☆
Storage temperature			Tst	-20 to +80	°C	-	
Operating temperature	Luminance 1	Front surface	TopF	-20 to +70	°C	Note3	
		Rear surface	TopR	-20 to +70	°C	Note4	
	Luminance 2	Front surface	TopF	-20 to +60	°C	Note5	☆
		Rear surface	TopR	-20 to +60	°C	Note6	
Relative humidity Note7			RH	≤ 95	%	Ta ≤ 40°C	
				≤ 85	%	40°C < Ta ≤ 50°C	
				≤ 55	%	50°C < Ta ≤ 60°C	
				≤ 36	%	60°C < Ta ≤ 70°C	
Absolute humidity Note7			AH	≤ 70 Note8	g/m³	Ta > 70°C	
Operating altitude			-	≤ 4,850	m	-20°C ≤ Ta ≤ 70°C	
Storage altitude			-	≤ 13,600	m	-20°C ≤ Ta ≤ 80°C	

Note1: D0+/-, D1+/-, D2+/-, D3+/- and CLK+/-
Note2: MSL
Note3: Measured at center of LCD panel surface (including self-heat)
Note4: Measured at center of LCD module's rear shield surface (including self-heat)
Note5: Measured at center of LCD panel surface (including self-heat) ☆
Note6: Measured at center of LCD module's rear shield surface (including self-heat) ☆
Note7: No condensation
Note8: Water amount at Ta= 70°C and RH= 36%

One step solution for LCD / PDP / OLED panel application: Datasheet, inventory and accessory! www.panelook.com

Global LCD Panel Exchange Center www.panelook.com 屏库:全球液晶屏交易中心

4.3 ELECTRICAL CHARACTERISTICS

4.3.1 LCD panel signal processing board

(Ta= 25°C)

Parameter		Symbol	min.	typ.	max.	Unit	Remarks
Power supply voltage		VCC	3.0	3.3	3.6	V	-
Power supply current		ICC	-	500 Note1	700 Note2	mA	at VCC= 3.3V
Permissible ripple voltage		VRP	-	-	100	mVp-p	for VCC
Differential input threshold voltage for LVDS receiver	High	VTH	-	-	+100	mV	at VCM= 1.2V Note3
	Low	VTL	-100	-	-	mV	
Input voltage swing for LVDS receiver		Vi	0	-	2.4	V	-
Terminating resistance		RT	-	100	-	Ω	-
Input voltage for MSL signal	High	VPH	2.0	-	VCC	V	-
	Low	VPL	0	-	0.8	V	
Input current for MSL signal	High	IPH	-	-	300	μA	-
	Low	IPL	-300	-	-	μA	

Note1: Checkered flag pattern [by EIAJ ED-2522]
Note2: Pattern for maximum current
Note3: Common mode voltage for LVDS receiver

One step solution for LCD / PDP / OLED panel application: Datasheet, inventory and accessory! www.panelook.com

Global LCD Panel Exchange Center www.panelook.com 屏库:全球液晶屏交易中心

4.3.2 Backlight lamp

1. Luminance 1: 330 cd/m^2 (typ.)

(Ta= 25°C, Note1, Note2, Note3, Note4)

Parameter	Symbol	min.	typ.	max.	Unit	Remarks
Forward current	IL	-	50	55	mA	-
Forward voltage	VL	23.9	27.0	30.6	V	Ta= +25°C at IL= 50mA/ One circuit
		21.1	-	-	V	Ta= +70°C at IL= 50mA/ One circuit
		-	-	33.0	V	Ta= -20°C at IL= 50mA/ One circuit
		-	-	33.3	V	Ta= -20°C at IL= 55mA/ One circuit

2. Luminance 2: 350 cd/m^2 (typ.) ☆

(Ta= 25°C, Note1, Note2, Note3, Note4)

Parameter	Symbol	min.	typ.	max.	Unit	Remarks
Forward current	IL	-	55	60	mA	-
Forward voltage	VL	24.1	27.3	29.1	V	Ta= +25°C at IL= 55mA/ One circuit
		22.4	-	-	V	Ta= +60°C at IL= 55mA/ One circuit
		-	-	30.8	V	Ta= -20°C at IL= 55mA/ One circuit
		-	-	31.3	V	Ta= -20°C at IL= 60mA/ One circuit

Note1: Please drive with constant current.
Note2: The above specifications are for one LED circuit of the backlight.
Note3: The Luminance uniformity may be changed depending on the current variation between 6 circuits. It is recommended that the current value difference among the circuits be less than 5%.

One step solution for LCD / PDP / OLED panel application: Datasheet, inventory and accessory! www.panelook.com

Global LCD Panel Exchange Center www.panelook.com 屏库:全球液晶屏交易中心

4.3.3 Power supply voltage ripple

This product works if the ripple voltage levels are over the permissible values as the following table, but there might be noise on the display image.

Power supply voltage		Ripple voltage Note1 (Measure at input terminal of power supply)	Unit
VCC	3.3V	≤ 100	mVp-p

Note1: The permissible ripple voltage includes spike noise.

4.3.4 Fuse

Parameter	Fuse		Rating	Fusing current	Remarks
	Type	Supplier			
VCC	FCC16202AB	KAMAYA ELECTRIC Co., Ltd	2.0A 36V	4.0A	Note1

Note1: The power supply's rated current must be more than the fusing current. If it is less than the fusing current, the fuse may not blow in a short time, and then nasty smell, smoke and so on may occur.

One step solution for LCD / PDP / OLED panel application: Datasheet, inventory and accessory! www.panelook.com

Global LCD Panel Exchange Center www.panelook.com 屏库:全球液晶屏交易中心

4.4 POWER SUPPLY VOLTAGE SEQUENCE

4.4.1 LCD panel signal processing board

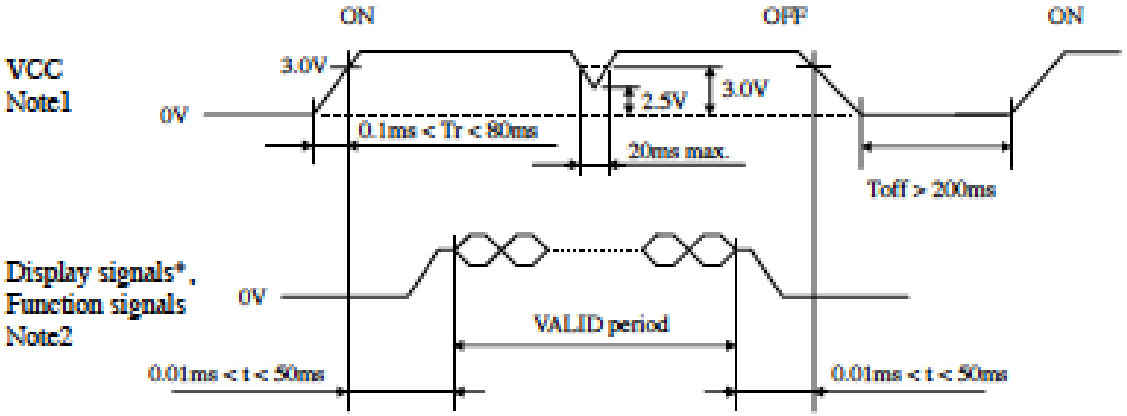

* These signals should be measured at the terminal of 100Ω resistance.

Note1: If there is a voltage variation (voltage drop) at the rising edge of VCC below 3.0V, there is a possibility that a product does not work due to a protection circuit.

Note2: Display signals (D0+/-, D1+/-, D2+/-, D3+/-, CLK+/-) and function signal (MSL) must be set to Low or High impedance, except the VALID period (See above sequence diagram), in order to avoid the circuitry damage.
If some of display and function signals of this product are cut while this product is working, even if the signal input to it once again, it might not work normally. If a customer stops the display and function signals, VCC also must be shut down.

4.4.2 LED driver board

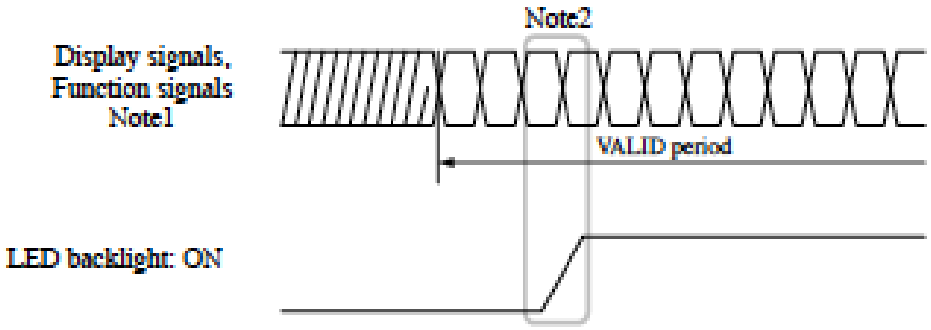

Note1: These are the display and function signals for LCD panel signal processing board.

Note2: The backlight should be turned on within the valid period of display and function signals, in order to avoid unstable data display.

One step solution for LCD / PDP / OLED panel application: Datasheet, inventory and accessory! www.panelook.com

Global LCD Panel Exchange Center www.panelook.com 屏库:全球液晶屏交易中心

4.5 CONNECTIONS AND FUNCTIONS FOR INTERFACE PINS

4.5.1 LCD panel signal processing board

CN1 socket (LCD module side): DF14H-20P-1.25H (Hirose Electric Co., Ltd. (HRS))
Adaptable plug: DF14-20S-1.25C (Hirose Electric Co., Ltd. (HRS))

Pin No.	Symbol	Signal	Remarks
1	VCC	Power supply	Note1
2	VCC		
3	GND	Ground	Note1
4	GND		
5	D0-	Pixel data	Note2
6	D0+		
7	GND	Ground	Note1
8	D1-	Pixel data	Note2
9	D1+		
10	GND	Ground	Note1
11	D2-	Pixel data	Note2
12	D2+		
13	GND	Ground	Note1
14	CLK-	Pixel clock	Note2
15	CLK+		
16	GND	Ground	Note1
17	D3-	Pixel data	Note2
18	D3+		
19	RSVD	Reserved	Keep this pin open.
20	MSL	Selection of LVDS input map	High: Input map A Low or Open: Input map B Note3, Note4

Note1: All GND and VCC terminals should be used without any non-connected lines.
Note2: Twist pair wires with 100Ω (Characteristic impedance) should be used between LCD panel signal processing board and LVDS transmitter.
Note3: See "**4.5.4 Connection between receiver and transmitter for LVDS**".
Note4: This terminal is pulled-down in the product. (Pull-down resistance: 50kΩ)

One step solution for LCD / PDP / OLED panel application: Datasheet, inventory and accessory! www.panelook.com

Global LCD Panel Exchange Center www.panelook.com 屏库:全球液晶屏交易中心

4.5.2 Backlight lamp

CN2 plug (LCD module side): SM12B-SRSS-TB (J.S.T. Mfg. Co., Ltd.)
Adaptable socket: SHR-12V-S (J.S.T. Mfg. Co., Ltd.)

Pin No.	Symbol	Signal	Remarks
1	A1	Anode1	-
2	K1	Cathode1	-
3	A2	Anode2	-
4	K2	Cathode2	-
5	A3	Anode3	-
6	K3	Cathode3	-
7	A4	Anode4	-
8	K4	Cathode4	-
9	A5	Anode5	-
10	K5	Cathode5	-
11	A6	Anode6	-
12	K6	Cathode6	-

4.5.3 Positions of plug and socket

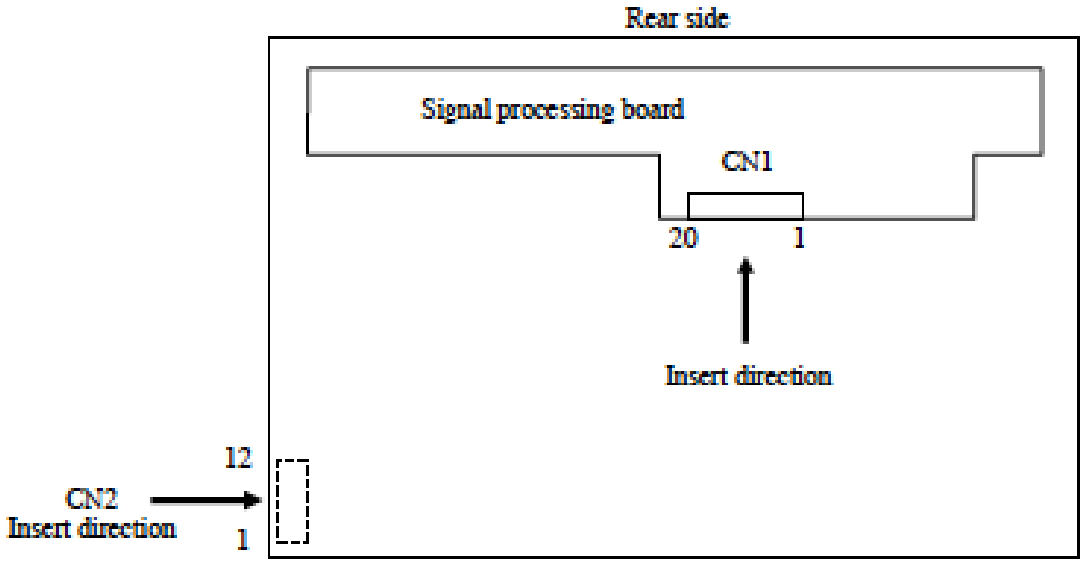

One step solution for LCD / PDP / OLED panel application: Datasheet, inventory and accessory! www.panelook.com

Global LCD Panel Exchange Center www.panelook.com 屏库:全球液晶屏交易中心

4.5.4 Connection between receiver and transmitter for LVDS
(1) Input LVDS map A (MSL: "High")

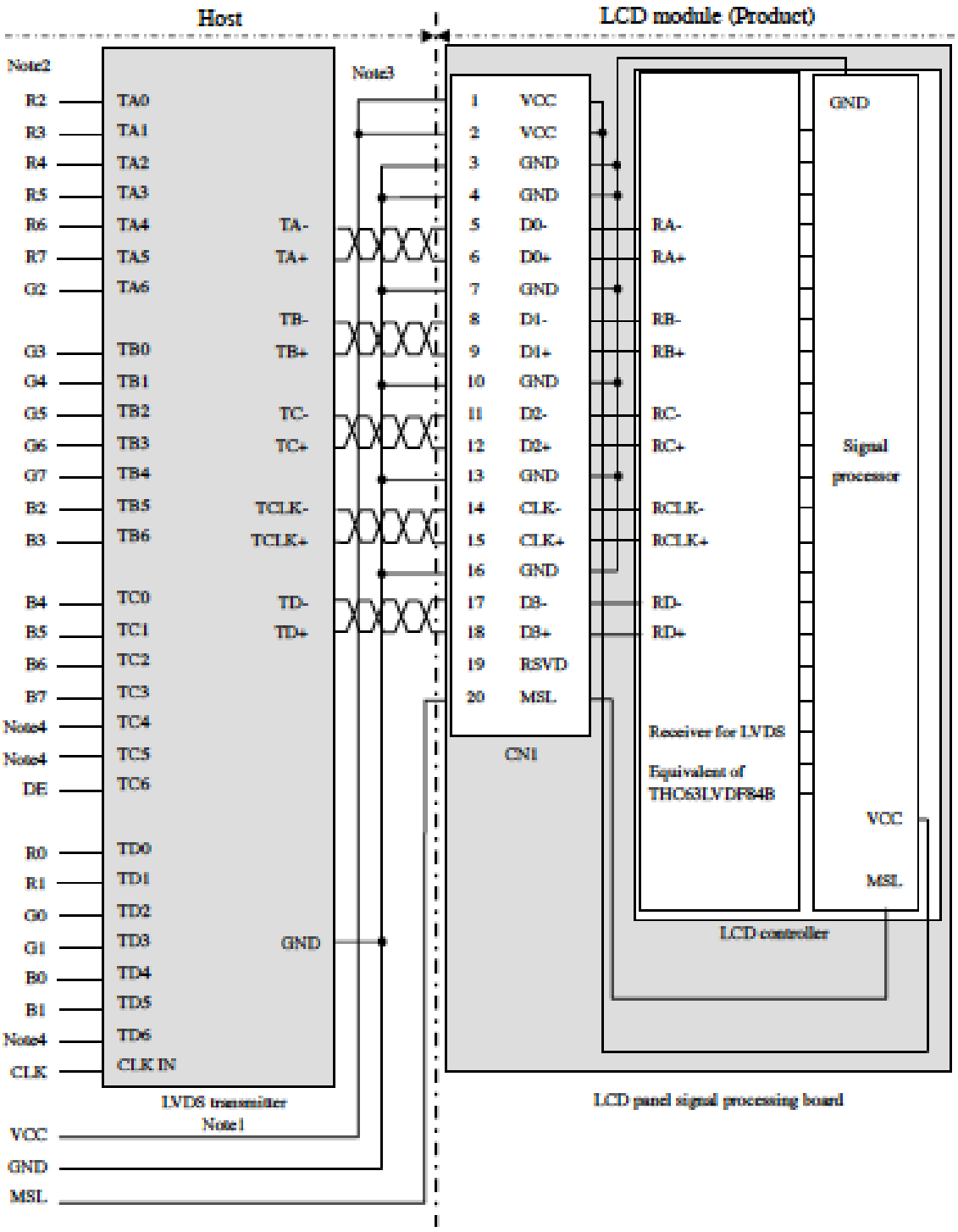

Note1: Recommended transmitter: THC63LVDM83D (THine Electronics Inc.) or equivalent
Note2: LSB (Least Significant Bit) – R0, G0, B0 MSB (Most Significant Bit) – R7, G7, B7
Note3: Twist pair wires with 100Ω (Characteristic impedance) should be used between LCD panel signal processing board and LVDS transmitter.
Note4: Input signals to TC4, TC5 and TD6 are not used inside the product, but do not keep TC4, TC5 and TD6 open to avoid noise problem.

One step solution for LCD / PDP / OLED panel application: Datasheet, inventory and accessory! www.panelook.com

Global LCD Panel Exchange Center www.panelook.com 屏库:全球液晶屏交易中心

(2) Input LVDS map B (MSL: "Low" or "Open")

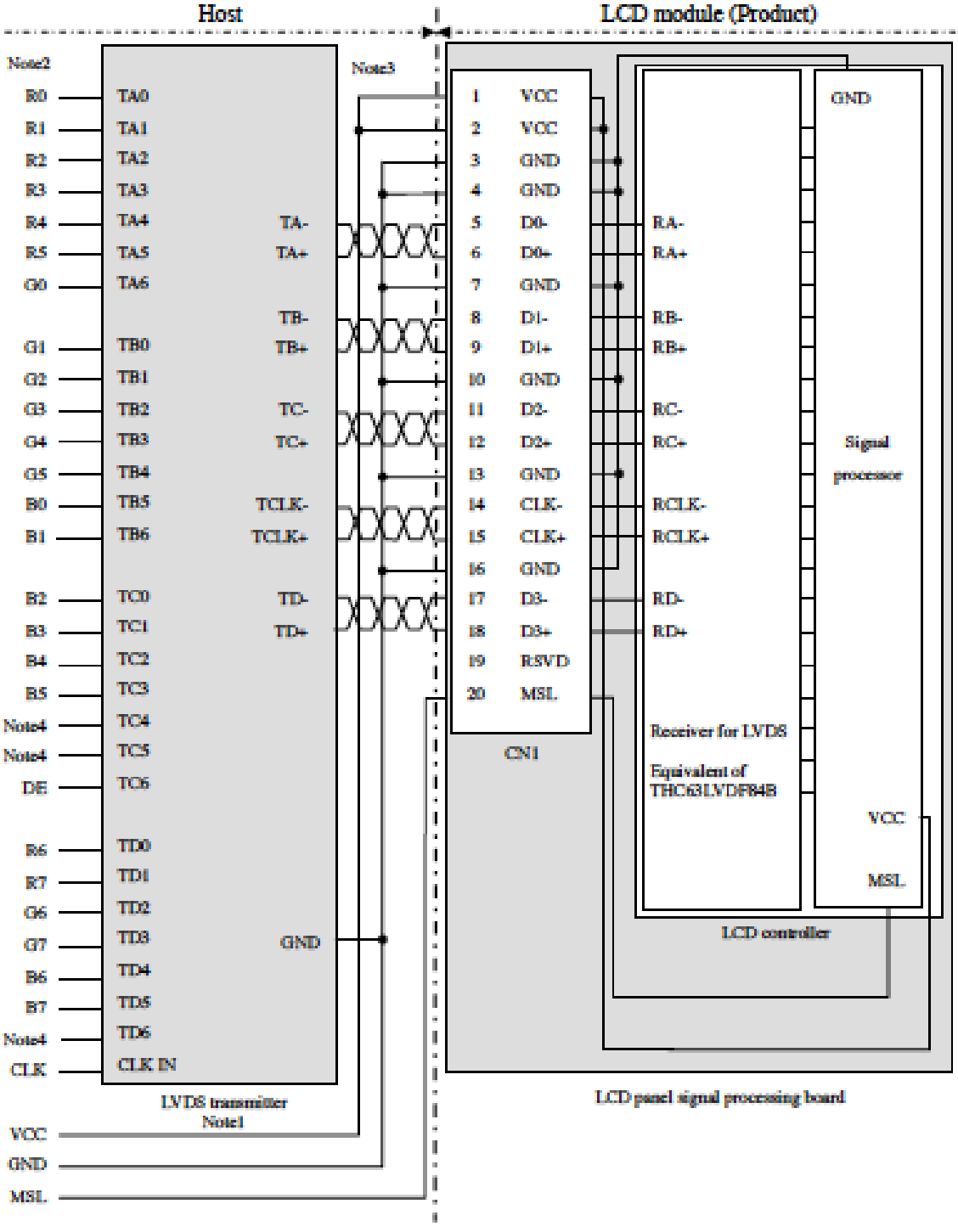

Note1: Recommended transmitter: THC63LVDM83D (THine Electronics Inc.) or equivalent
Note2: LSB (Least Significant Bit) – R0, G0, B0 MSB (Most Significant Bit) – R7, G7, B7
Note3: Twist pair wires with 100Ω (Characteristic impedance) should be used between LCD panel signal processing board and LVDS transmitter.
Note4: Input signals to TC4, TC5 and TD6 are not used inside the product, but do not keep TC4, TC5 and TD6 open to avoid noise problem.

One step solution for LCD / PDP / OLED panel application: Datasheet, inventory and accessory! www.panelook.com

Global LCD Panel Exchange Center www.panelook.com 屏库:全球液晶屏交易中心

4.6 DISPLAY COLORS AND INPUT DATA SIGNALS

This product can display 16,777,216 colors equivalent with 256 gray scales. Also the relation between display colors and input data signals is as follows;

Display colors		Data signal (0: Low level, 1: High level)																							
		R7	R6	R5	R4	R3	R2	R1	R0	G7	G6	G5	G4	G3	G2	G1	G0	B7	B6	B5	B4	B3	B2	B1	B0
Basic Colors	Black	0	0	0	0	0	0	0	0	0	0	0	0	0	0	0	0	0	0	0	0	0	0	0	0
	Blue	0	0	0	0	0	0	0	0	0	0	0	0	0	0	0	0	1	1	1	1	1	1	1	1
	Red	1	1	1	1	1	1	1	1	0	0	0	0	0	0	0	0	0	0	0	0	0	0	0	0
	Magenta	1	1	1	1	1	1	1	1	0	0	0	0	0	0	0	0	1	1	1	1	1	1	1	1
	Green	0	0	0	0	0	0	0	0	1	1	1	1	1	1	1	1	0	0	0	0	0	0	0	0
	Cyan	0	0	0	0	0	0	0	0	1	1	1	1	1	1	1	1	1	1	1	1	1	1	1	1
	Yellow	1	1	1	1	1	1	1	1	1	1	1	1	1	1	1	1	0	0	0	0	0	0	0	0
	White	1	1	1	1	1	1	1	1	1	1	1	1	1	1	1	1	1	1	1	1	1	1	1	1
Red gray scale	Black	0	0	0	0	0	0	0	0	0	0	0	0	0	0	0	0	0	0	0	0	0	0	0	0
		0	0	0	0	0	0	0	1	0	0	0	0	0	0	0	0	0	0	0	0	0	0	0	0
	dark	0	0	0	0	0	0	1	0	0	0	0	0	0	0	0	0	0	0	0	0	0	0	0	0
	↑					:								:								:			
	↓					:								:								:			
	bright	1	1	1	1	1	1	0	1	0	0	0	0	0	0	0	0	0	0	0	0	0	0	0	0
		1	1	1	1	1	1	1	0	0	0	0	0	0	0	0	0	0	0	0	0	0	0	0	0
	Red	1	1	1	1	1	1	1	1	0	0	0	0	0	0	0	0	0	0	0	0	0	0	0	0
Green gray scale	Black	0	0	0	0	0	0	0	0	0	0	0	0	0	0	0	0	0	0	0	0	0	0	0	0
		0	0	0	0	0	0	0	0	0	0	0	0	0	0	0	1	0	0	0	0	0	0	0	0
	dark	0	0	0	0	0	0	0	0	0	0	0	0	0	0	1	0	0	0	0	0	0	0	0	0
	↑					:								:								:			
	↓					:								:								:			
	bright	0	0	0	0	0	0	0	0	1	1	1	1	1	1	0	1	0	0	0	0	0	0	0	0
		0	0	0	0	0	0	0	0	1	1	1	1	1	1	1	0	0	0	0	0	0	0	0	0
	Green	0	0	0	0	0	0	0	0	1	1	1	1	1	1	1	1	0	0	0	0	0	0	0	0
Blue gray scale	Black	0	0	0	0	0	0	0	0	0	0	0	0	0	0	0	0	0	0	0	0	0	0	0	0
		0	0	0	0	0	0	0	0	0	0	0	0	0	0	0	0	0	0	0	0	0	0	0	1
	dark	0	0	0	0	0	0	0	0	0	0	0	0	0	0	0	0	0	0	0	0	0	0	1	0
	↑					:								:								:			
	↓					:								:								:			
	bright	0	0	0	0	0	0	0	0	0	0	0	0	0	0	0	0	1	1	1	1	1	1	0	1
		0	0	0	0	0	0	0	0	0	0	0	0	0	0	0	0	1	1	1	1	1	1	1	0
	Blue	0	0	0	0	0	0	0	0	0	0	0	0	0	0	0	0	1	1	1	1	1	1	1	1

One step solution for LCD / PDP / OLED panel application: Datasheet, inventory and accessory! www.panelook.com

Global LCD Panel Exchange Center www.panelook.com 屏库:全球液晶屏交易中心

4.7 DISPLAY POSITIONS

The following table is the coordinates per pixel (See "4.8 SCANNING DIRECTIONS").

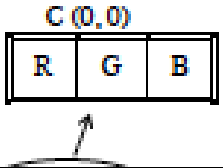

C(0, 0)	C(1, 0)	•••	C(X, 0)	•••	C(1022, 0)	C(1023, 0)
C(0, 1)	C(1, 1)	•••	C(X, 1)	•••	C(1022, 1)	C(1023, 1)
⋮	⋮	⋮	⋮	⋮	⋮	⋮
C(0, Y)	C(1, Y)	•••	C(X, Y)	•••	C(1022, Y)	C(1023, Y)
⋮	⋮	⋮	⋮	⋮	⋮	⋮
C(0, 766)	C(1, 766)	•••	C(X, 766)	•••	C(1022, 766)	C(1023, 766)
C(0, 767)	C(1, 767)	•••	C(X, 767)	•••	C(1022, 767)	C(1023, 767)

4.8 SCANNING DIRECTIONS

The following figures are seen from a front view.

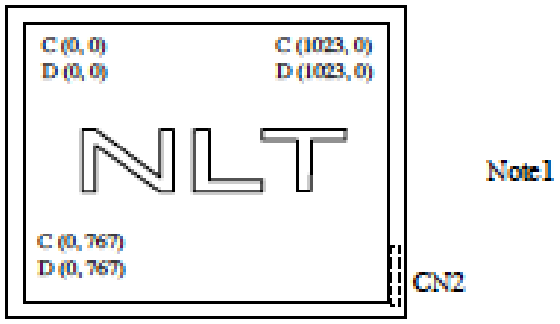

Note1: Meaning of C (X, Y) and D (X, Y)
C (X, Y): The coordinates of the display position (See "4.7 DISPLAY POSITIONS")
D (X, Y): The data number of input signal for LCD panel signal processing board

One step solution for LCD / PDP / OLED panel application: Datasheet, inventory and accessory! www.panelook.com

Global LCD Panel Exchange Center www.panelook.com 屏库:全球液晶屏交易中心

4.9 INPUT SIGNAL TIMINGS

4.9.1 Outline of input signal timings

- Horizontal signal
  Note1

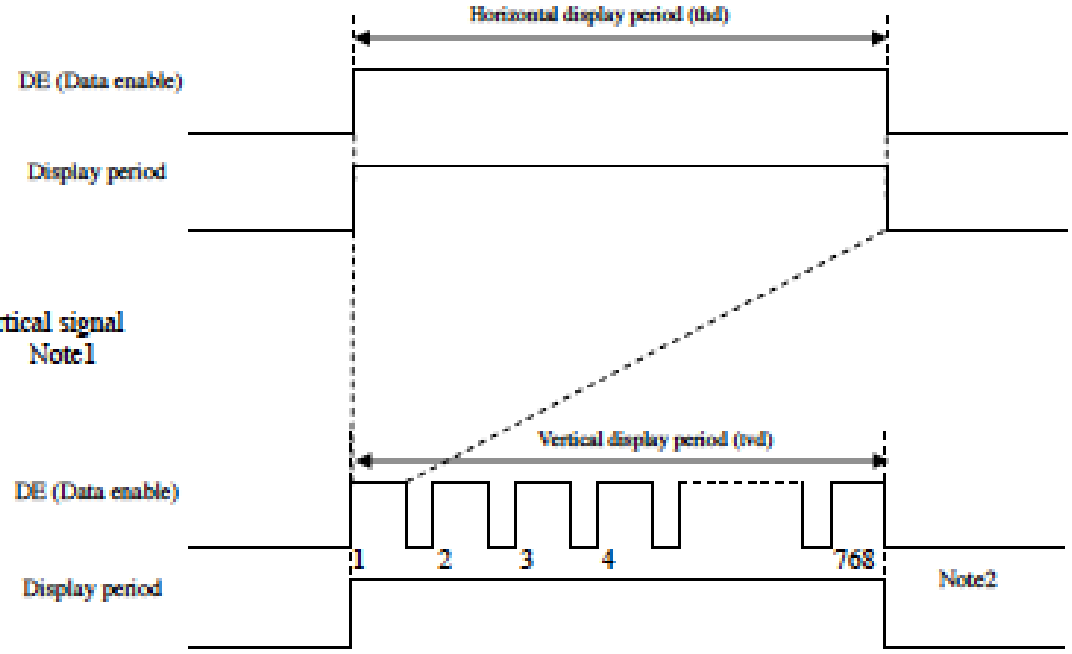

- Vertical signal
  Note1

Note1: This diagram indicates virtual signal for set up to timing.
Note2: See "**4.9.3 Input signal timing chart**" for the pulse number.

One step solution for LCD / PDP / OLED panel application: Datasheet, inventory and accessory! www.panelook.com

Global LCD Panel Exchange Center www.panelook.com 屏库:全球液晶屏交易中心

4.9.2 Timing characteristics

(Note1, Note2, Note3)

Parameter			Symbol	min.	typ.	max.	Unit	Remarks
CLK	Frequency		1/tc	60.0	65.0	80.0	MHz	15.384 ns (typ.)
	Duty		-	-			-	-
	Rise time, Fall time		-				ns	
DATA	CLK-DATA	Setup time	-	-			ns	-
		Hold time	-				ns	
	Rise time, Fall time		-				ns	
DE	Horizontal	Cycle	th	16.000	20.676	-	μs	48.363 kHz (typ.)
				1,100	1,344	1,800	CLK	
		Display period	thd	1,024			CLK	-
	Vertical	Cycle	tv	-	16.666	20.0	ms	60.000 Hz (typ.)
				771	806	-	H	
		Display period	tvd	768			H	-
	CLK-DE	Setup time	-	-			ns	-
		Hold time	-				ns	
	Rise time, Fall time		-				ns	

Note1: Definition of parameters is as follows.
tc= 1CLK, th= 1H
Note2: See the data sheet of LVDS transmitter.
Note3: Vertical cycle (tv) should be specified in integral multiple of Horizontal cycle (th).

One step solution for LCD / PDP / OLED panel application: Datasheet, inventory and accessory! www.panelook.com

Global LCD Panel Exchange Center www.panelook.com 屏库:全球液晶屏交易中心

4.9.3 Input signal timing chart

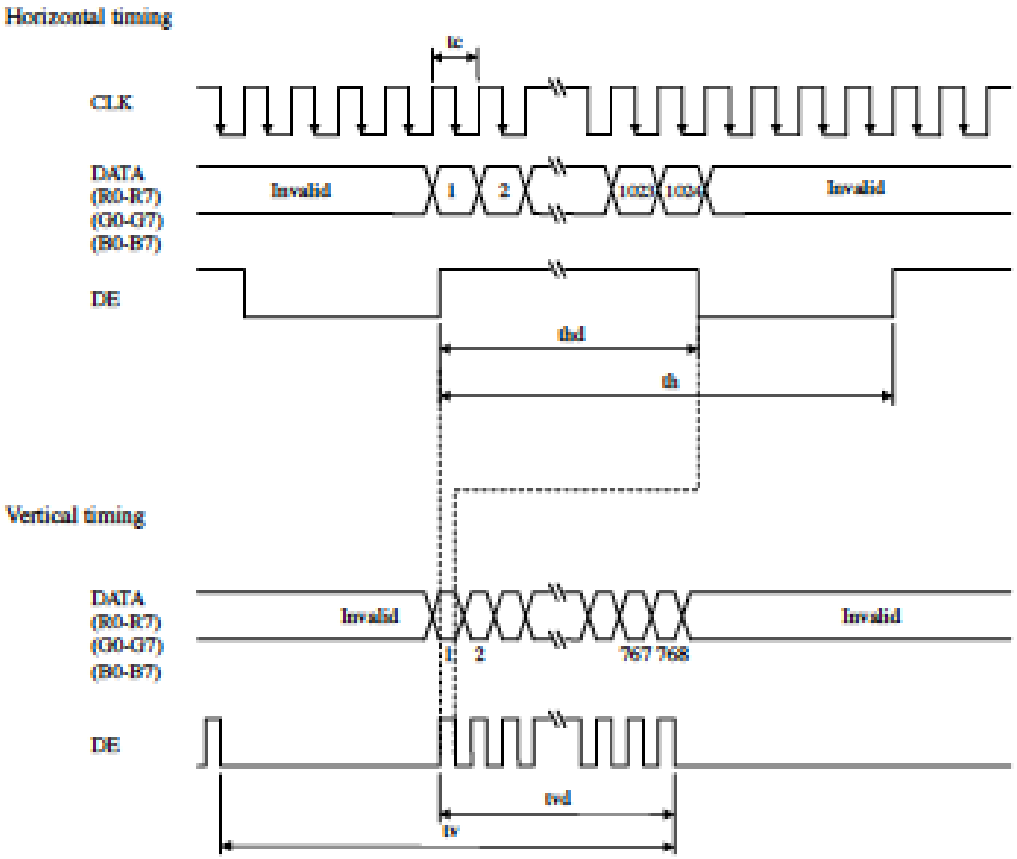

One step solution for LCD / PDP / OLED panel application: Datasheet, inventory and accessory! www.panelook.com

Global LCD Panel Exchange Center www.panelook.com 屏库:全球液晶屏交易中心

4.10 OPTICS

4.10.1 Optical characteristics

(Note1, Note2)

Parameter		Condition	Symbol	min.	typ.	max.	Unit	Measuring instrument	Remarks	
Luminance 1		White at center θR= 0°, θL= 0°, θU= 0°, θD= 0°	L1	250	330	-	cd/m²	SR-3 or BM-5A	Note3	☆
Luminance 2		White at center θR= 0°, θL= 0°, θU= 0°, θD= 0°	L2	270	350	-	cd/m²	SR-3 or BM-5A	Note4	☆
Contrast ratio		White/Black at center θR= 0°, θL= 0°, θU= 0°, θD= 0°	CR	500	900	-	-	SR-3 or BM-5A	Note5	
Luminance uniformity		White θR= 0°, θL= 0°, θU= 0°, θD= 0°	LU	-	1.2	1.35	-	BM-5A	Note6	
Chromaticity	White	x coordinate	Wx	0.263	0.313	0.363	-	SR-3	Note7	☆
		y coordinate	Wy	0.279	0.329	0.379	-			
	Red	x coordinate	Rx	-	0.638	-	-			
		y coordinate	Ry	-	0.342	-	-			
	Green	x coordinate	Gx	-	0.311	-	-			
		y coordinate	Gy	-	0.622	-	-			
	Blue	x coordinate	Bx	-	0.150	-	-			
		y coordinate	By	-	0.068	-	-			
Color gamut		θR= 0°, θL= 0°, θU= 0°, θD= 0° at center, against NTSC color space	C	65	72	-	%			
Response time		Black to White	Ton	-	14	20	ms	BM-5A	Note8 Note9	
		White to Black	Toff	-	11	20	ms			
Viewing angle	Right	θU= 0°, θD= 0°, CR≥ 10	θR	70	88	-	°	BM-5A or EZ Contrast	Note10	
	Left	θU= 0°, θD= 0°, CR≥ 10	θL	70	88	-	°			
	Up	θR= 0°, θL= 0°, CR≥ 10	θU	70	88	-	°			
	Down	θR= 0°, θL= 0°, CR≥ 10	θD	70	88	-	°			

Note1: These are initial characteristics.

Note2: Measurement conditions are as follows. ☆
Ta= 25°C, VCC= 3.3V, IL= 50mA (Luminance 1) or 55mA (Luminance 2) / One circuit,
Display mode: XGA, Horizontal cycle= 1/48.363kHz, Vertical cycle= 1/60.0Hz

Optical characteristics are measured at luminance saturation 20minutes after the product works in the dark room. Also measurement methods are as follows.

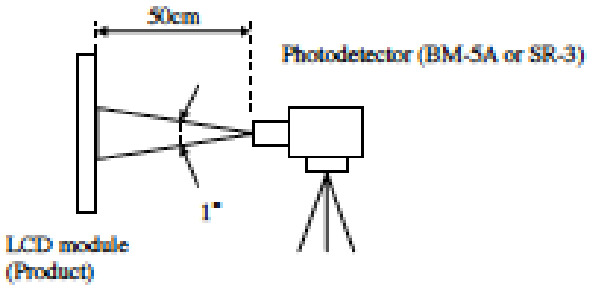

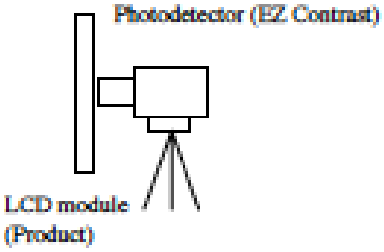

Note3: At IL = 50mA / One Circuit

Note4: At IL = 55mA / One Circuit ☆

Note5: See "**4.10.2 Definition of contrast ratio**".

Note6: See "**4.10.3 Definition of luminance uniformity**".

Note7: These coordinates are found on CIE 1931 chromaticity diagram.

Note8: Product surface temperature: TopF= 30°C

Note9: See "**4.10.4 Definition of response times**".

Note10: See "**4.10.5 Definition of viewing angles**".

One step solution for LCD / PDP / OLED panel application: Datasheet, inventory and accessory! www.panelook.com

Global LCD Panel Exchange Center www.panelook.com 屏库:全球液晶屏交易中心

4.10.2 Definition of contrast ratio

The contrast ratio is calculated by using the following formula.

$$\text{Contrast ratio (CR)} = \frac{\text{Luminance of white screen}}{\text{Luminance of black screen}}$$

4.10.3 Definition of luminance uniformity

The luminance uniformity is calculated by using following formula.

$$\text{Luminance uniformity (LU)} = \frac{\text{Maximum luminance from ① to ⑤}}{\text{Minimum luminance from ① to ⑤}}$$

The luminance is measured at near the 5 points shown below.

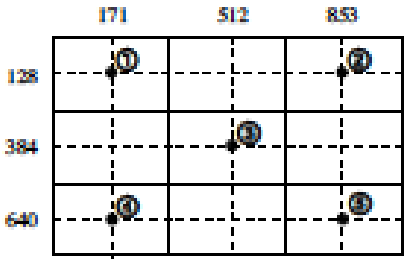

4.10.4 Definition of response times

Response time is measured at the time when the luminance changes from "black" to "white", or "white" to "black" on the same screen point, by photo-detector. Ton is the time when the luminance changes from 10% up to 90%. Also Toff is the time when the luminance changes from 90% down to 10% (See the following diagram.).

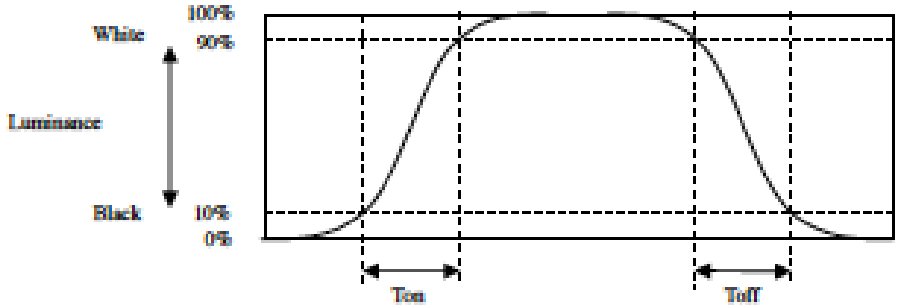

4.10.5 Definition of viewing angles

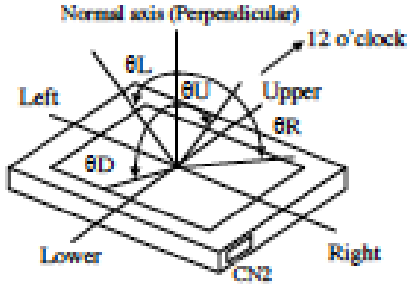

One step solution for LCD / PDP / OLED panel application: Datasheet, inventory and accessory! www.panelook.com

Global LCD Panel Exchange Center www.panelook.com 屏库:全球液晶屏交易中心

5. ESTIMATED LUMINANCE LIFETIME

The luminance lifetime is the time from initial luminance to half-luminance.

This lifetime is the estimated value, and is not guarantee value.

1. Luminance 1: 330 cd/m^2 (typ.)

Condition		Estimated luminance lifetime (Life time expectancy) Note1, Note2, Note3	Unit
LED elementary substance	25°C (Ambient temperature of the product) Continuous operation, IL= 50mA/One circuit	70,000	h
	70°C (Surface temperature at screen center) Continuous operation, IL= 50mA/One circuit	60,000	h

2. Luminance 2: 350 cd/m^2 (typ.) ☆

Condition		Estimated luminance lifetime (Life time expectancy) Note1, Note2, Note3	Unit
LED elementary substance	25°C (Ambient temperature of the product) Continuous operation, IL= 55mA/One circuit	70,000	h
	60°C (Surface temperature at screen center) Continuous operation, IL= 55mA/One circuit	60,000	h

Note1: Life time expectancy is mean time to half-luminance.
Note2: Estimated luminance lifetime is not the value for an LCD module but the value for LED elementary substance.
Note3: By ambient temperature, the lifetime changes particularly. Especially, in case the product works under high temperature environment, the lifetime becomes short.

One step solution for LCD / PDP / OLED panel application: Datasheet, inventory and accessory! www.panelook.com

Global LCD Panel Exchange Center www.panelook.com 屏库:全球液晶屏交易中心

6. RELIABILITY TESTS

Test item		Condition Note2	Judgment Note
High temperature and humidity (Operation)		① 60±2°C, RH= 90%, 240hours ② Display data is white.	No display malfunctions
High temperature (Operation)		① 70±3°C, 240hours ② Display data is white.	
Heat cycle (Operation)		① -20±3°C 1hour 70±3°C 1hour ② 50cycles, 4hours/cycle ③ Display data is white.	
Thermal shock (Non operation)		① -20±3°C 30minutes 80±3°C 30minutes ② 100cycles, 1hour/cycle ③ Temperature transition time is within 5 minutes.	
ESD (Operation)		① 150pF, 150Ω, ±10kV ② 9 places on a panel surface Note3 ③ 10 times each places at 1 sec interval	
Dust (Operation)		① Sample dust: No. 15 (by JIS-Z8901) ② 15 seconds stir ③ 8 times repeat at 1 hour interval	
Vibration (Non operation)		① 5 to 100Hz, 11.76m/s^2 ② 1 minute/cycle ③ X, Y, Z directions ④ 30 times each directions	No display malfunctions No physical damages
Mechanical shock (Non operation)		① 294m/s^2, 11ms ② X, Y, Z directions ③ 3 times each directions	
Low pressure	Operation	① 53.3kPa (Equivalent to altitude 4,850m) ② -20°C±3°C 24 hours ③ 70°C±3°C 24 hours	No display malfunctions
	Non-operation	① 15kPa (Equivalent to altitude 13,600m) ② -20°C±3°C 24 hours ③ 80°C±3°C 24 hours	

Note1: Display and appearance are checked under environmental conditions equivalent to the inspection conditions of defect criteria.

Note2: IL= 50mA / One circuit ☆

Note3: See the following figure for discharge points.

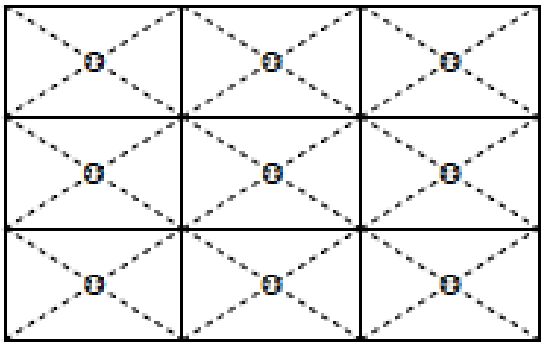

One step solution for LCD / PDP / OLED panel application: Datasheet, inventory and accessory! www.panelook.com

Global LCD Panel Exchange Center www.panelook.com 屏库:全球液晶屏交易中心

7. PRECAUTIONS

7.1 MEANING OF CAUTION SIGNS

The following caution signs have very important meaning. **Be sure to read "7.2 CAUTIONS" and "7.3 ATTENTIONS"!**

This sign has the meaning that a customer will be injured or the product will sustain damage if the customer practices wrong operations.

This sign has the meaning that a customer will be injured, if the customer practices wrong operations.

7.2 CAUTIONS

- **Do not shock and press the LCD panel and the backlight! There is a danger of breaking, because they are made of glass. (Shock: Equal to or no greater than 294m/s^2 and equal to or no greater than 11ms, Pressure: Equal to or no greater than 19.6 N (ϕ16mm jig))**

7.3 ATTENTIONS

7.3.1 Handling of the product

① Take hold of both ends without touching the circuit board when the product (LCD module) is picked up from inner packing box to avoid broken down or misadjustment, because of stress to mounting parts on the circuit board.
② When the product is put on the table temporarily, display surface must be placed downward.
③ When handling the product, take the measures of electrostatic discharge with such as earth band, ionic shower and so on, because the product may be damaged by electrostatic.
④ The torque for product mounting screws must never exceed 0.343N·m. Higher torque might result in distortion of the bezel. And the length of product mounting screws must be ≤ 2.8mm.
⑤ The product must be installed using mounting holes without undue stress such as bends or twist (See outline drawings). And do not add undue stress to any portion (such as bezel flat area). Bends or twist described above and undue stress to any portion may cause display mura.
⑥ Do not press or rub on the sensitive product surface. When cleaning the panel surface, wipe it with a soft dry cloth.
⑦ Do not push or pull the interface connectors while the product is working.
⑧ When handling the product, use of an original protection sheet on the product surface (polarizer) is recommended for protection of product surface. Adhesive type protection sheet may change color or characteristics of the polarizer.
⑨ Usually liquid crystals don't leak through the breakage of glasses because of the surface tension of thin layer and the construction of LCD panel. But, if you contact with liquid crystal by any chance, please wash it away with soap and water.

One step solution for LCD / PDP / OLED panel application: Datasheet, inventory and accessory! www.panelook.com

Global LCD Panel Exchange Center www.panelook.com 屏库:全球液晶屏交易中心

7.3.2 Environment

① Do not operate or store in high temperature, high humidity, dewdrop atmosphere or corrosive gases. Keep the product in packing box with antistatic pouch in room temperature to avoid dusts and sunlight, when storing the product.
② In order to prevent dew condensation occurred by temperature difference, the product packing box must be opened after enough time being left under the environment of an unpacking room. Evaluate the storage time sufficiently because dew condensation is affected by the environmental temperature and humidity. (Recommended storage time: 6 hours or more with the original packing state after a customer receives the package)
③ Do not operate in high magnetic field. Circuit boards may be broken.
④ This product is not designed as radiation hardened.

7.3.3 Characteristics

The following items are neither defects nor failures.

① Characteristics of the LCD (such as response time, luminance, color uniformity and so on) may be changed depending on ambient temperature. If the product is stored under condition of low temperature for a long time, it may cause display mura. In this case, the product should be operated after enough time being left under condition of operating temperature.
② Display mura, flickering, vertical streams or tiny spots may be observed depending on display patterns.
③ Do not display the fixed pattern for a long time because it may cause image sticking. Use a screen saver, if the fixed pattern is displayed on the screen.
④ The display color may be changed depending on viewing angle because of the use of condenser sheet in the backlight.
⑤ Optical characteristics may be changed depending on input signal timings.

7.3.4 Others

① All GND and VCC terminals should be used without any non-connected lines.
② Do not disassemble a product or adjust variable resistors.
③ See "REPLACEMENT MANUAL FOR LAMP HOLDER SET", when replacing lamp holder set.
④ Pack the product with the original shipping package, in order to avoid any damages during transportation, when returning the product to NLT for repairing and so on.
⑤ The information of China RoHS directive six hazardous substances or elements in this product is as follows.

China RoHS directive six hazardous substances or elements					
Lead (Pb)	Mercury (Hg)	Cadmium (Cd)	Hexavalent Chromium (Cr VI)	Polybrominated Biphenys (PBB)	Polybrominated Biphenyl Ethers (PBDE)
×	○	○	○	○	○

Note1: ○: This indicates that the poisonous or harmful material in all the homogeneous materials for this part is equal or below the limitation level of SJ/T11363-2006 standard regulation.
×: This indicates that the poisonous or harmful material in all the homogeneous materials for this part is above the limitation level of SJ/T11363-2006 standard regulation.

One step solution for LCD / PDP / OLED panel application: Datasheet, inventory and accessory! www.panelook.com

One step solution for LCD / PDP / OLED panel application: Datasheet, inventory and accessory! www.panelook.com

8. OUTLINE DRAWINGS

8.1 FRONT VIEW

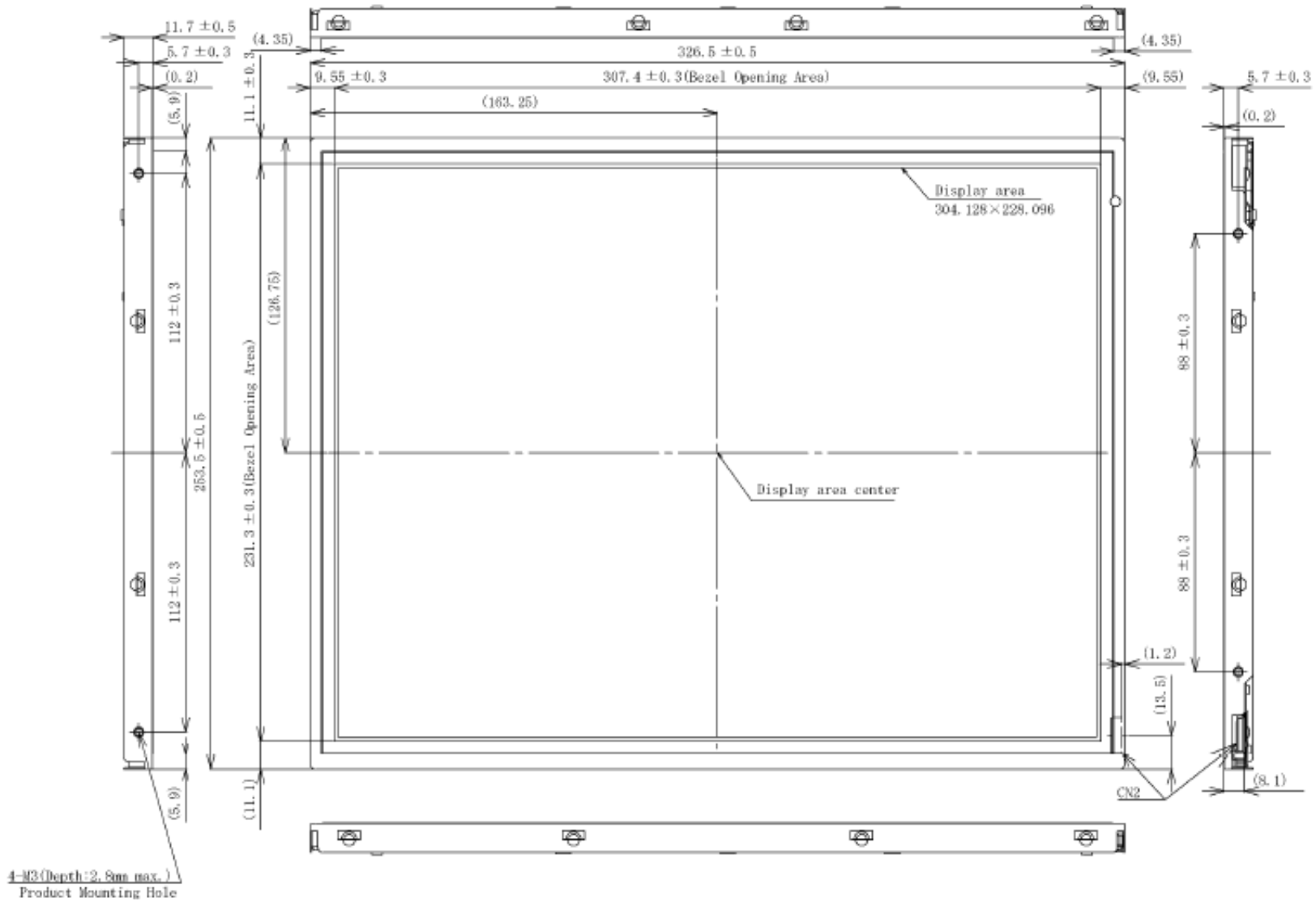

Unit: mm

Note1: The values in parentheses are for reference.
Note2: The torque for product mounting screws must never exceed 0.343N-m. And the length of product mounting screws must be ≤ 2.8mm.

Global LCD Panel Exchange Center www.panelook.com 屏库：全球液晶屏交易中心

One step solution for LCD / PDP / OLED panel application: Datasheet, inventory and accessory! www.panelook.com

8.2 REAR VIEW

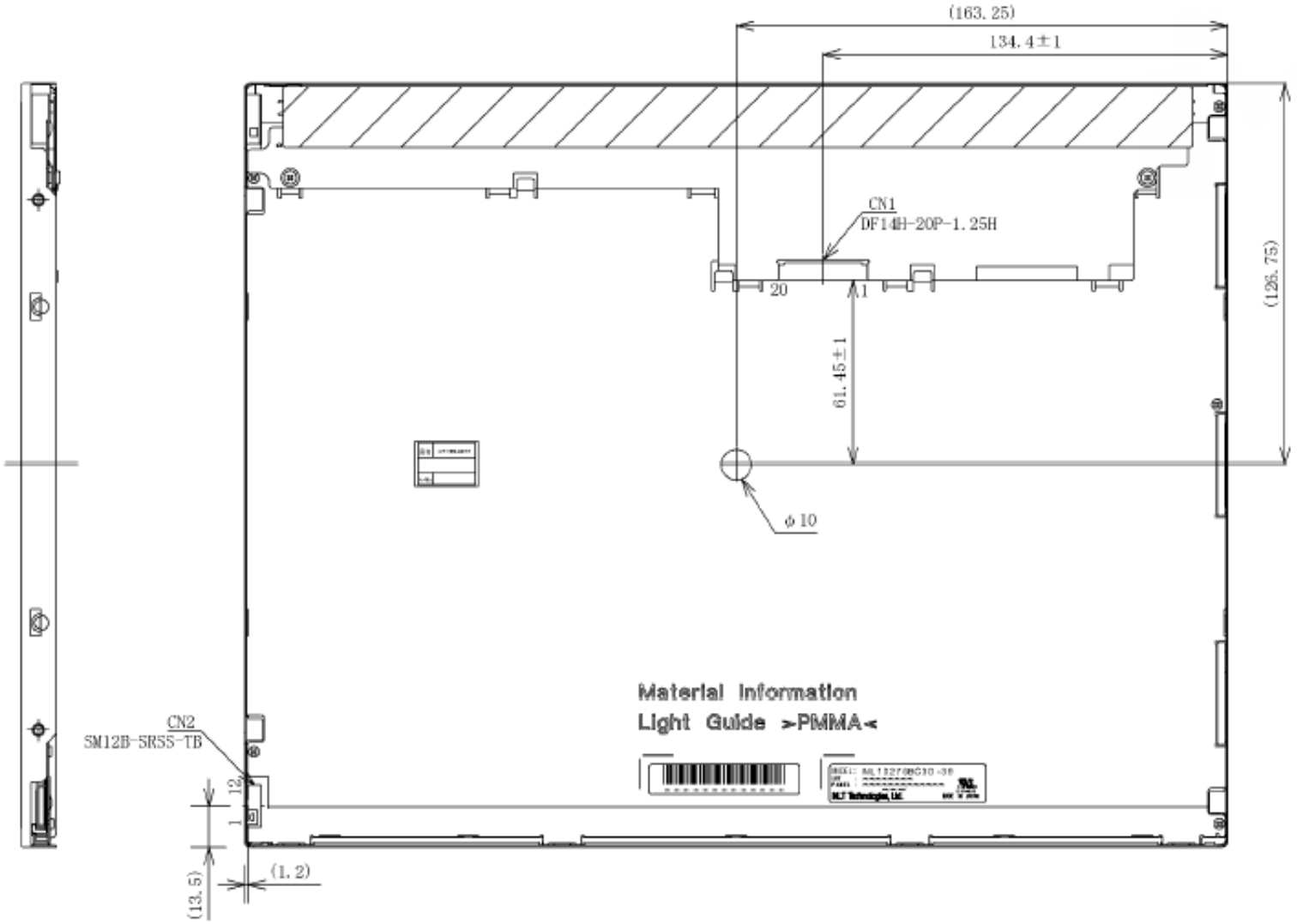

Note1: The values in parentheses are for reference.
Note2: The torque for product mounting screws must never exceed 0.343N-m. And the length of product mounting screws must be ≤ 2.8mm.

Unit: mm

Global LCD Panel Exchange Center www.panelook.com 屏库：全球液晶屏交易中心